COMMSCOPE® Instruction Sheet

860587211
Issue 1, March 2015
www.commscope.com

M2000 Modular Panel Installation

General

The **CommScope**® M2000 modular panels for M-series outlets can be configured for copper, fiber, or both, and is available in 1U and 2U flat and angled versions. When installed with M-series outlets, modular patch cords and cables, it is an integral part of the **CommScope**® connectivity system. The panel consists of a rack mounted base unit, rear cable management hardware, and labels for port numbering. Each panel mounts in a 19-inch (483mm) equipment rack with universal hole spacing.

Ordering information is listed below:

Material ID	Catalog No.	Description
760207274	M2000-1U	24-port modular flat panel - 1U
760207282	M2000-2U	48-port modular flat panel - 2U
760207290	M2000A-1U	24-port modular angled panel - 1U
760207308	M2000A-2U	48-port modular angled panel - 2U

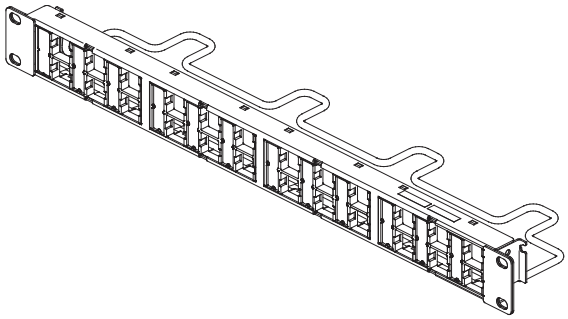

M2000-1U Flat Panel

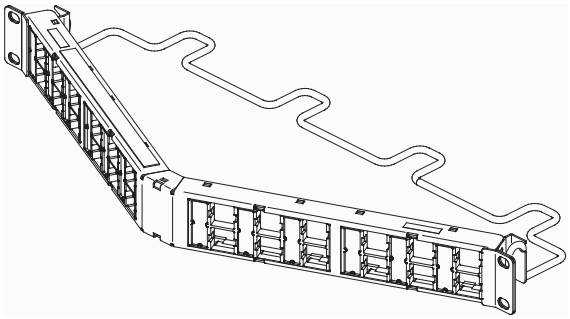

M2000A-1U Angled Panel

How to Contact Us

- To find out more about **CommScope**® products, visit us on the web at www.commscope.com/
- For technical assistance:
  - Within the United States, contact your local account representative or technical support at 1-800-344-0223. Outside the United States, contact your local account representative or **PartnerPRO**™ Network Partner.
  - Within the United States, report any missing/damaged parts or any other issues to **CommScope** Customer Claims at 1-866-539-2795 or email to claims@commscope.com. Outside the United States, contact your local account representative or **PartnerPRO** Network Partner.

Tools Required

- Phillips-head screwdriver

For RoHS Inquiries:
CommScope Inc.
Corke Abbey, Bray
Co. Dublin, Ireland
Attn: Legal Department

© 2015 CommScope, Inc.
All rights reserved

This product is covered by one or more U.S. patents or their foreign equivalents. For patents, see www.commscope.com/ProductPatent/ProductPatent.aspx

Parts List

Verify parts against the parts list below:

Quantity				Description
M2000-1U	M2000A-1U	M2000-2U	M2000A-2U	
1	–	1	–	M2000 flat panel
–	1	–	1	M2000 angled panel
4	4	8	8	6-port bezel
1	1	2	2	Labels
1	1	2	2	Label retainers
4	4	4	4	Mounting screws, #12-24 x 1/2"
1	1	2	2	Rear cable management bar
4	4	8	8	Cable ties
1	1	1	1	Instruction sheet

WARNING – Important Safety Instructions

When using this product, the following basic safety precautions should be followed to reduce the risk of fire, electric shock, and injury to persons:

- Never install communications wiring in wet locations unless it is designed for wet locations.
- Never install this product during a lightning storm. There is a remote risk of electric shock.
- Never touch uninsulated communication wiring or terminals unless the communication circuit has been disconnected at the network interface.
- **Caution:** All wiring that connects to this equipment must meet applicable local and national building codes and network wiring standards for communication cable.

Step 1 – Mount Panel to Rack

1. Mount the M2000 panel to the rack using the four 12-24 x 1/2" screws provided. Orient panel as shown with the label areas positioned to the left of the outlet openings.

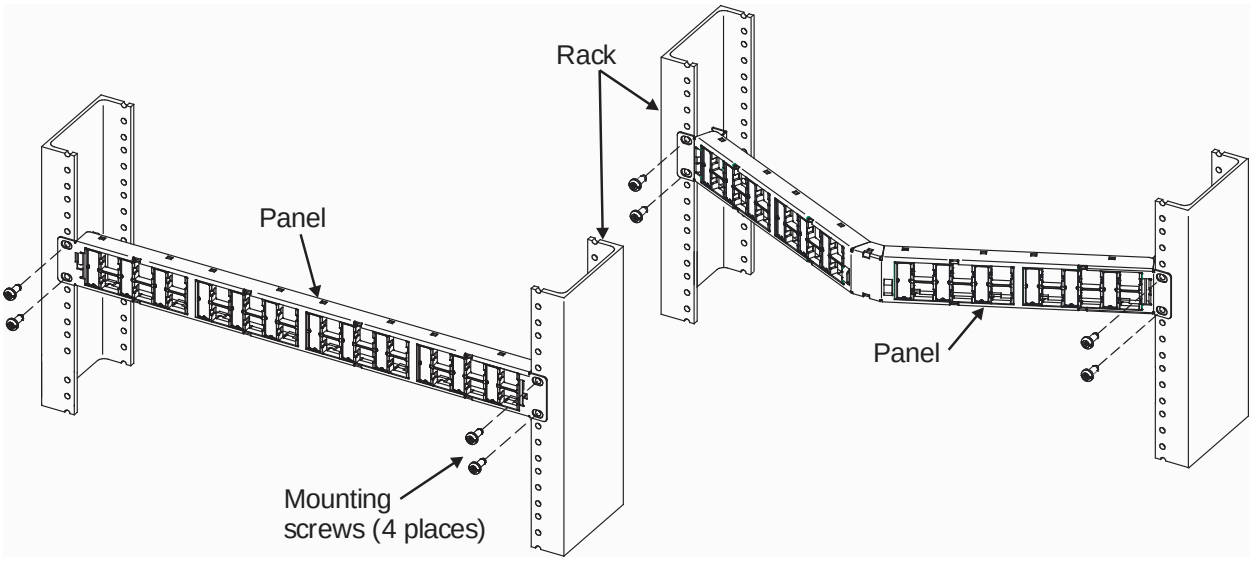

Step 2 – Populate Panel

1. Populate panel with the appropriate information outlets after terminating per the instructions provided with each outlet.

Step 3 – Install Cable Bar and Cables

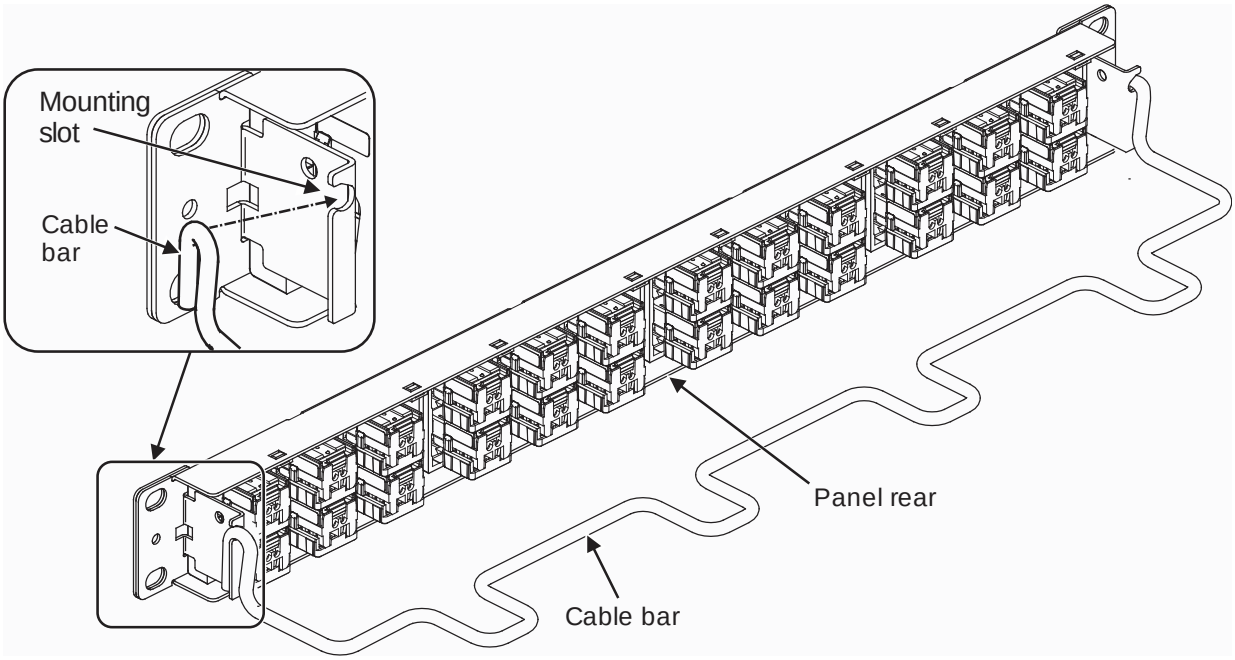

1. Attach cable bar to rear of panel as shown above. For 48-port panels, two cable bars are provided.
2. Route cables evenly to cable management bar and secure using hook-and-loop straps as shown.

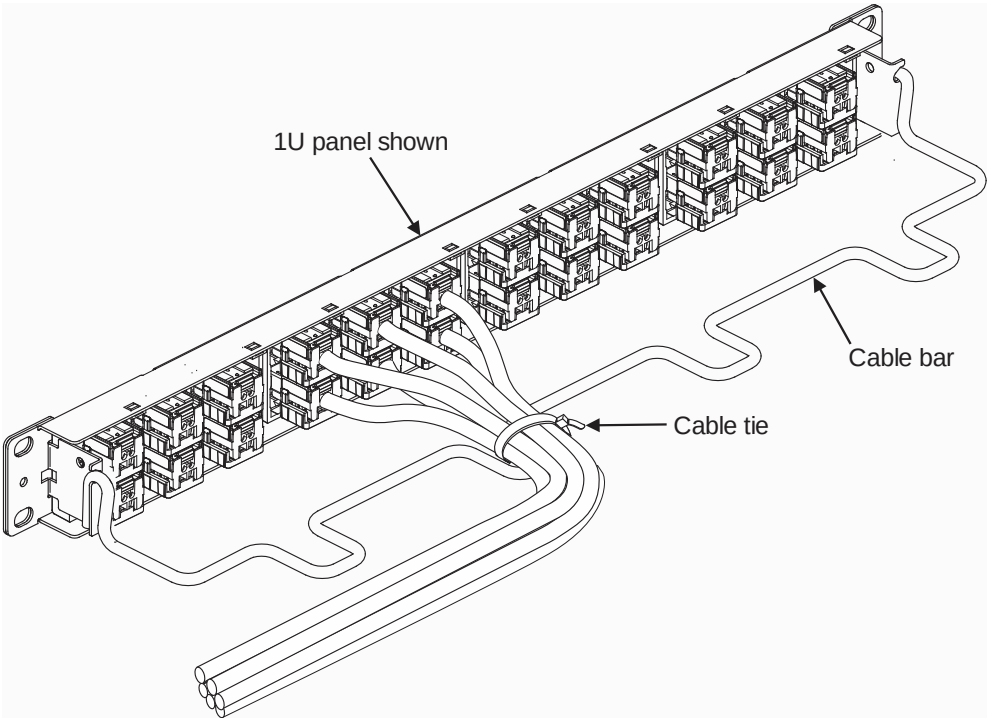

Step 4 – Attach Port Designation Labels and Label Retainers

1. Print port designations on label sheets provided.
2. Insert labels and label retainers into outlet bezel from the front as shown.
3. To print a designation label, go to http://www.commscope.com/Resources/Labeling-Templates and scroll down to ***360 Panels and Shelves.*** Select the proper label template:
   - **360** Evolve Label Sheet A4 (760187286)
   - **360** Evolve Label Sheet US LTR (760187278)

   Note: Labeling website has two options for printing labels: letter size and A4 size.

